MDHKT-85

wireless voice intercom and data transmission module

DATA SHEET

DATA: 2018-06-19

1. Summary:

MDHKT-85 is a cost-effective wireless voice intercom and data transmission module,with built-in high-performance RF transceiver chip, microcontroller and RF amplifier.

The external MCU can set the working parameters of the module and through the standard asynchronous serial interface (RS232) communication and control the working state of the module.

This module only needs an external antenna,a MIC and a voice amplifier to form a complete intercom or DMR(digital mobile radio) station.

2. Characteristics:

- Frequency demodulation technology based on digital signal processing technology ;
- Frequency range : 400～470MHZ;
- Frequency space: 5K/6.25K/12.5K/25K;
- RF output power: High power 2W,middle power 1W, Low power 0.5W
- Voice Encryption (interference) (8 options)
- SMS transceiver function;
- Built-in CTCSS (38 groups), CDCSS (83 groups) codec;
- Automatic elimination of tail sound function;
- Digital volume (level 1-8) adjustable;
- Voice control hands-free communication function (level 0-8) adjustable;
- Noise level (0-9) adjustable;
- MIC sensitivity adjustable software (1-8)
- High reception sensitivity: -122dbM;
- Ultra-low-power sleep mode (0.1uA);
- Supply voltage: 3.3～5.0V

- Size: 17*28.5*3.0mm;
- RF Range: 10km in open air

Applications : 1、Portable intercom and paging system;

2、Wireless Data Transmission (SMS) system;

3、mobile phone and other products with interphone function embedded.

3. Dimensions and pins (bottom view):

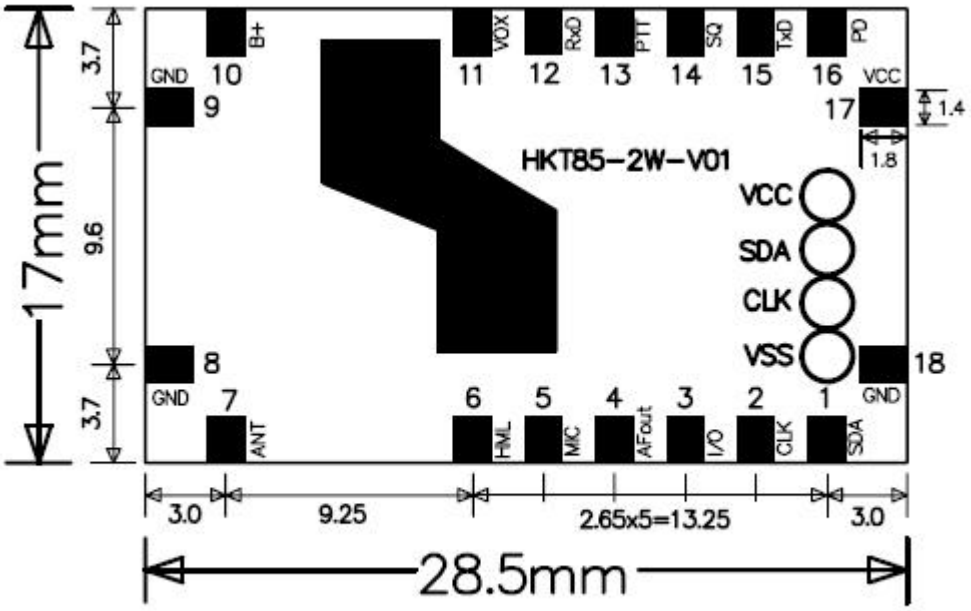

Bottom View

Pins	Number	Function description
SDA	1	Programming pin (I/O)
CLK	2	Programming pin (I/O)
I/O	3	Programming pin (I/O)
AF_OUT	4	Audio output
MIC	5	MIC input
HML	6	RF high and low power control;Ground connected for low power 0.5W, floating for high power 2W, 1.5v input for 1W.
ANT	7	Rf input/output
GND	8	GND

GND	9	GND
B+	10	Power positive
VOX	11	Voice control, hands-free call detection, high level Enable
RXD	12	Asynchronous serial interface (receiving data port)
PTT	13	TX/RX control pin，1=receive，0=transmit
SQ	14	Noise silencer, low level enable
TXD	15	Asynchronous serial interface (transmitting data port)
PD	16	Module SLEEP enable pin, 0=SLEEP
VCC	17	3V output
GND	18	GND

4.Typical application circuit block diagram:

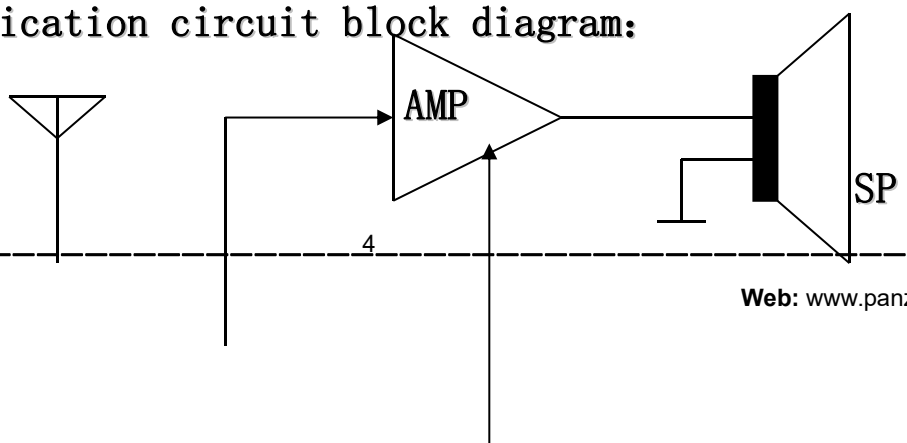

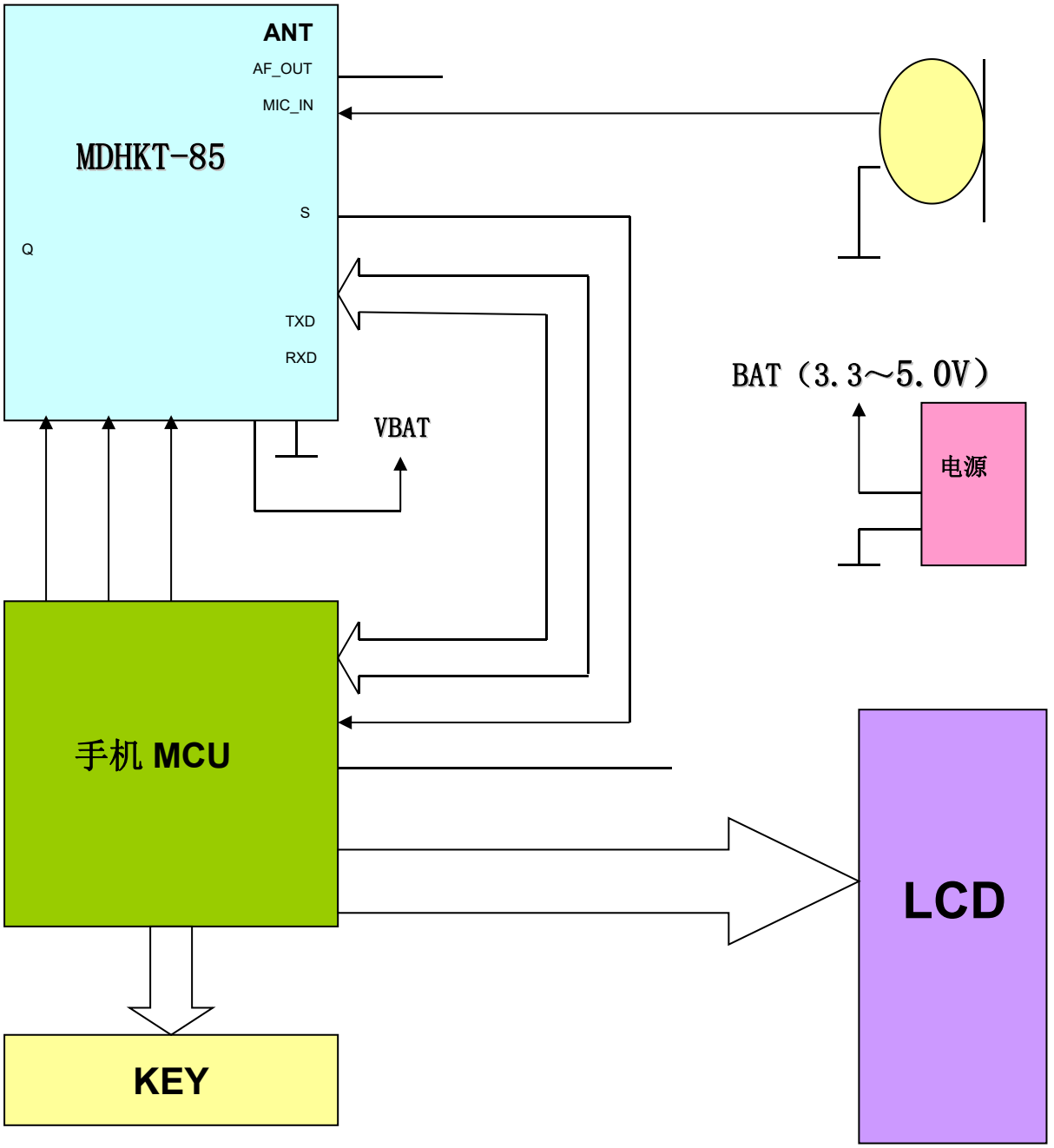

5. technical specification:

- DC electrical parameters (recommended working range)

Symbol	Description	Min	Typical	Max	unit
B+	Supply voltage	3.3	3.7	4.2	V

Tamb	environment temperature	-20	27	60	° C
	Power on module initialization time	400	500		ms
	CMOS low level voltage	0		0.6	V
	CMOS high level voltage	2.4		3	V

Notes: VCC = 3V(Interface voltage)

● DC electrical parameters (the largest scope of work)

Symbol	Description	Min	Typical	Max	unit
VBAT	Supply voltage	3.3	4.2	5.0	V
Tamb	environment temperature	-30		85	° C
I_{IN}	I/O input current(1)	-5		5	mA
V_{IN}	I/O input voltage(1)	-0.3		3.3	V

● power consumption indicators

(test condition: VBAT = 4.0V , T_A = -25 to 85 ° C)

operating mode	Description	Test condition	Typical	unit
continuous reception	Receiver on	-47dBm frequency modulation signal	40	mA
continuous transmission	Transmitter on	Input is 1KHz modulated signal, high power: middle power: Low power:	 1200 700 350	 mA mA mA

Receive static noise standby power-saving mode	The receiver is in standby power-saving working state		15	mA
Receive	The receiver is in	Receive static noise standby	0.1	uA

static noise standby power-saving mode	standby power-saving working state	power-saving mode		

● Overall electrical performance specification

frequency range (MHz)	400-470
channel spacing (KHz)	25 / 12.5KHZ
antenna impedance(Ω)	50
operating temperature range (℃)	-20～+55
frequency stability (ppm)	±2.5

● Receiving characteristics

(Unless otherwise specified, the test conditions are VBAT = 4.0 V, TA = -25 to 85 ° C)

Symbol	parameter description	Test condition	Min	Typical	Max	Unit
f_{IN}	Rf input frequency range	Intercom frequency band	400		470	MHz
Sensitivity	Reference sensitivity	12dB Output voice message sonar ratio	-120	-122		dBm
	Noise-opening sensitivity	Software adjustable		-120		
	Receiving SNR S/N	1.5 KHZ frequency deviation	52	55		
	adjacent channel	12.5KHz channel	52	55		dB

	selectivity	interval				
	intermodulation immunity	12.5KHz channel interval	52	55		
	Spurious response suppression	12.5KHz channel interval	52	55		dB
AF OUT	Spurious response suppression	Fo=1KHz software adjustable		500		mV
	Audio output distortion	Fo=1KHz		1	3	%
	audio frequency response	300HZ 500HZ 1KHZ 3000HZ		+4.5 +5.5 0 -13		

● transmission characteristics

(Unless otherwise specified, the test conditions are VBAT = 4.0 V, T_A = -25 to 85 ° C)

Symbol	parameter descriptor	Test condition	Min	Typical	Max	Unit
f_{OUT}	Rf output frequency range		400		470	MHz
P_{OUT}	Output power H M L		1700 800 350	2000 1000 450	2100 1200 500	mW
	Transmit current H M L			1200 700 350	1350 800 400	mA
	Maximum modulation frequency offset limit	Narrow band Wide band			2.5 5.0	KHZ KHZ
	Modulation sensitivity	Software adjustable(8 gears)	5	7	12	MV
	Audio modulation distortion			1	3	%

	modulation characteristic	300HZ 500HZ 1000HZ 3000HZ	 -5 3	-13 -6 0 6	 -9 9	DB DB DB DB
SNR	Audio modulation distortion		40	42	45	dB
	modulation characteristic			-60		dBc
	Audio modulation distortion			-60		dBc
	modulation characteristic	12.5KHz offset		-60		dBc
	Audio modulation distortion			-36		dBc

6. serial communication protocol :

MDHKT-85 module provides AT instruction interface, through which it is convenient to communicate and control with the module.The AT instruction set provided by this module covers all the queries and control commands for this module. The customer can use the module according to their own requirements. For details, please refer to MDHKT-85 Serial Communication Protocol.

Pay Attention:

1,After the module is powered on, if no AT instruction is received, its default working parameters are GBW= 12.5khz, TFV= 450.050mhz.

RFV= 450.050mhz, receiving and transmitting CTCSS=0, SQ=3, torsion off);

2,When the module is in data communication mode, the PTT pin cannot be connected to the low level.

7. U section antenna matching reference application diagram:

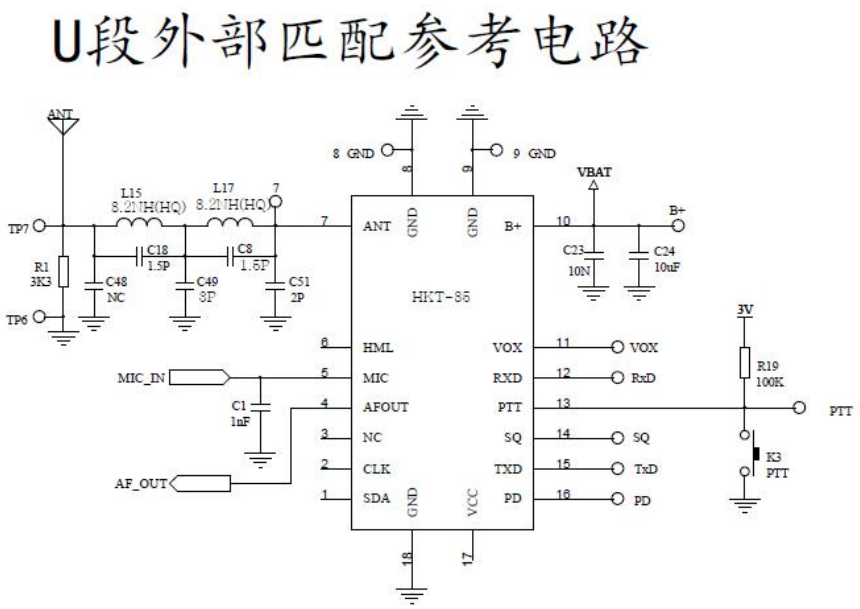

8. V section antenna matching reference application diagram:

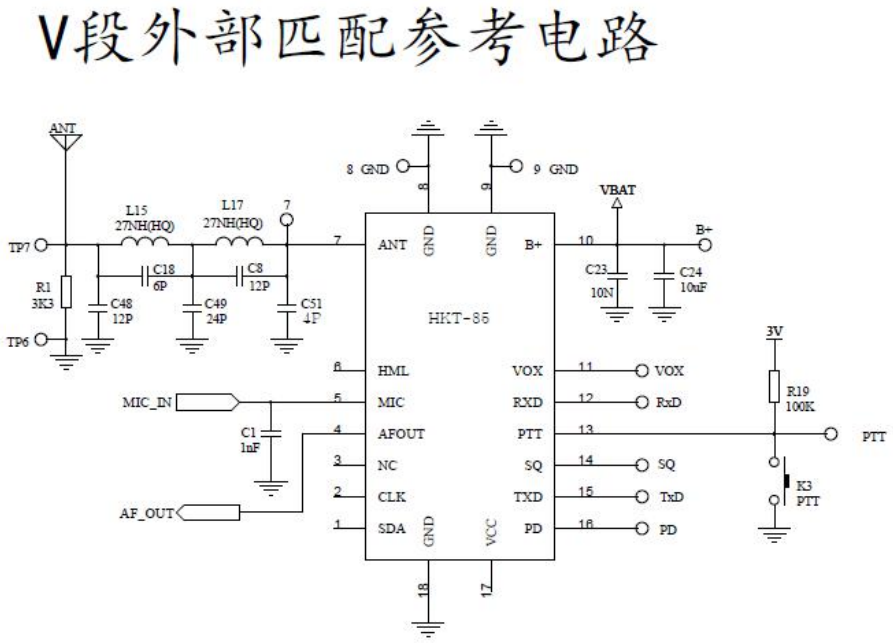

9. 245M antenna matching reference application diagram:

245M段外部匹配参考电路